OWNER'S MANUAL
BMW S1000RR

155-019-030-021

This cartridge kit stroke is 10mm longer than standard. As a result fork length will be altered. Please read notes on pg.2

DDS
DIRECT DAMPING SYSTEM

CONTENTS

Page 2	Recomended Settings
Page 3	Introduction
Page 4	Adjustment
Page 5	Setting the fork
Page 6-10	Changing the fork springs/ Service
Page 11	Notes

RECOMMENDED SETTINGS

Fork stroke	120mm
Preload	12mm
Air gap	180-200mm
Fork oil	5wt.
Spring rate	10N
Comp damping L/H leg	-16 Clicks out
Reb damping R/H leg	-18 Clicks out
Fork position	Manufacturer specs + 8mm

K-Tech Suspension Ltd products are manufactured to fit specific brands and models. Under no circumstances should any K-Tech Suspension Ltd products be fitted to an application other than that for which it has been designed, tested and manufactured.

This DDS cartridge kit stroke is 125mm, 10mm more than the standard cartridge. To accomodate this, the fork length is increased by 8mm with the K-Tech DDS cartridge installed. Therefore, upon fork installation, it is necessary to have 8mm more outer tube showing (+8mm) above the yokes than the standard fork position to achieve standard ride height.

INTRODUCTION

The DDS Front Fork Cartridges have been designed to fit original equipment front forks to use at the highest levels of competition, these high quality replacement cartridges are designed and manufactured in the UK using the highest quality materials and processes available. The closed cartridge pressurised Direct Damping System uses 20mm dia displacing pistons with an 8mm piston rod and 31mm dia control pistons giving a high flow of fluid for precise damping control. This unique damping system uses one leg for compression damping and one leg for rebound damping making each circuit independent for adjustment.

This product is not designed or intended for highway use.

The procedures in this manual should only be carried out by a qualified motorcycle technician. K-Tech Suspension Ltd will not be liable for any damages caused in any way to/by the product and any injuries sustained if the product is fitted or adjusted by someone who is neither an authorised dealer of K-Tech Suspension Ltd or who does not have the relevant qualifications in motorcycle technology. K-Tech Suspension Ltd will also not be liable if the correct tools are not used throughout the process of fitting and adjustment of a K-Tech suspension Ltd product. Please refer to the manufacturer's workshop manual before attempting these procedures. These procedures will require two people, you will need to remove all relevant bodywork and any other parts that may restrict you from carrying out these tasks.

ADJUSTMENT

The K-Tech DDS cartridge kits are adjustable by the following external adjusters.

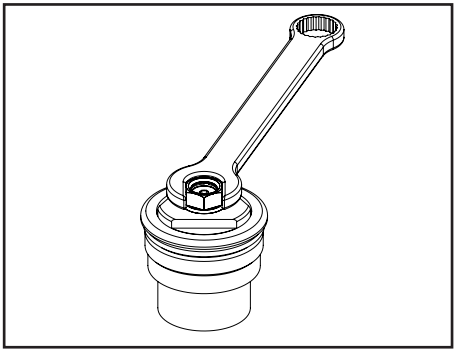

Spring Preload:- 14mm hex nut in centre of the fork caps.
Spring preload has 18mm of adjustment, 1 turn on hex nut equals 1mm of preload on spring.
Spring preload should be set from the fully open (anti-clockwise) position.

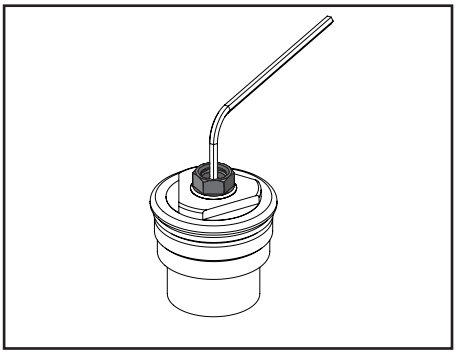

Compression Damping:- 3mm allen key in centre of the **BLACK** LEFT hand fork cap.
Adjustment range is 30 clicks.
All settings should be made from fully closed (clockwise) position.

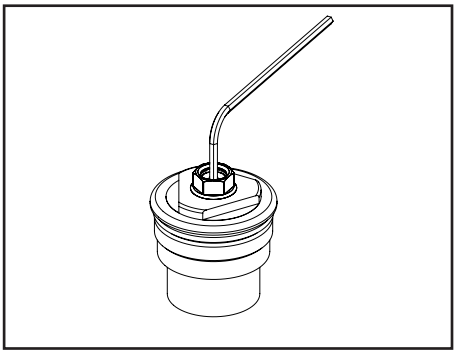

Rebound Damping:- 3mm allen key in centre of the **NATURAL** RIGHT hand fork cap.
Adjustment range is 30 clicks.
All settings should be made from fully closed (clockwise) position.

SETTING THE FORK

When the fork is fitted to the bike there is some basic geometry you should check with the preload adjustment, to do this you need to support your bike so the front wheel is lifted off the ground.

To set the preload on your forks you need a 14mm socket or spanner, preload is very important as it effects the attitude of the motorcycle and the angle of the forks.
To check the preload on your forks support the motorcycle on a stand so the front wheel is fully off the ground, make sure the fork is fully extended by pushing down on the wheel and measure the amount of chrome tube there is extending from below the seal to the axle bracket at the bottom of the fork. Make a note of this. (A)

Take the bike off of the stand and push down on the handlebars a few times allowing the bike to settle. Measure the same points as before and make a note of it. (B)

Subtract the second measurement -See Fig (B) from the first measurement - See Fig (A), this measurement should be between 25-35mm. If you do not have this measurement you need to adjust the preload with the 14mm hex on the top cap until you achieve this figure.

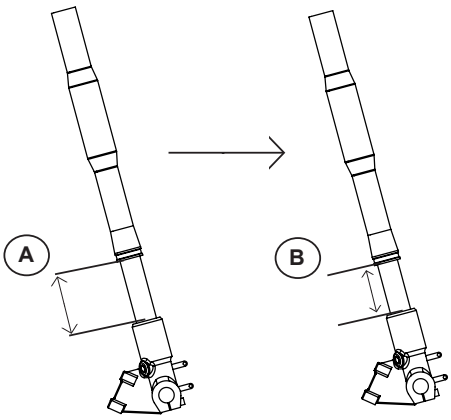

CHANGING THE FORK SPRINGS

Before changing fork springs make a note of the spring preload, compression and rebound damping settings.

1.

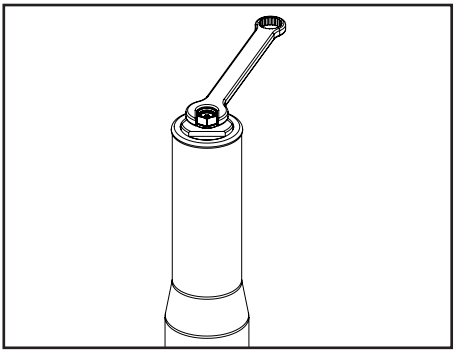

Remove all the preload from both forks using the 14mm hex in the centre of the top cap.

2.

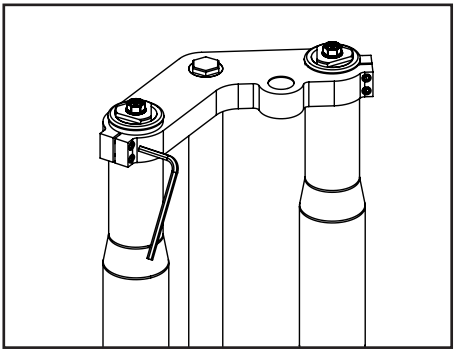

Loosen the clamping screws in the upper clamp.

Before performing step 3 please make sure the persons holding the handle bars are strong and in good health as the motorcycle maybe very heavy when lowered.

3.

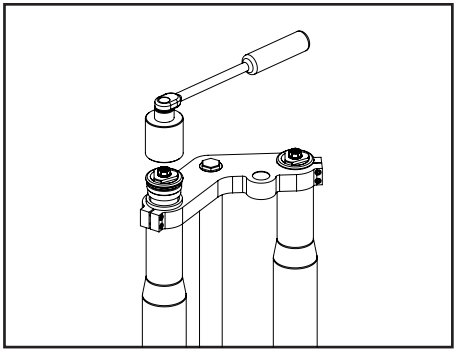

With the bike supported under the <u>bottom fork clamp</u> unscrew both fork caps with either Tool No. 113-010-020 or a top cap socket - Tool No. 113-020-000.
With one person on each handle bar remove the stand from under the bottom fork clamp and slowly lower the bike.

CHANGING THE FORK SPRINGS

4.

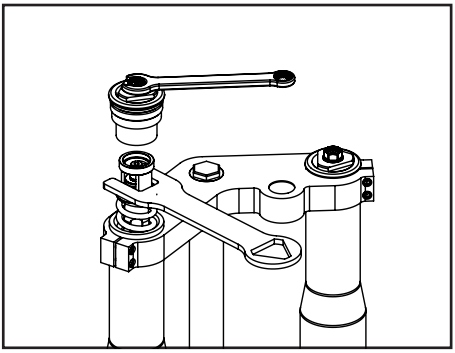

Remove the top cap nut assembly from the piston rod joiner using a 14mm spanner and Tool No. 113-010-020.

5.

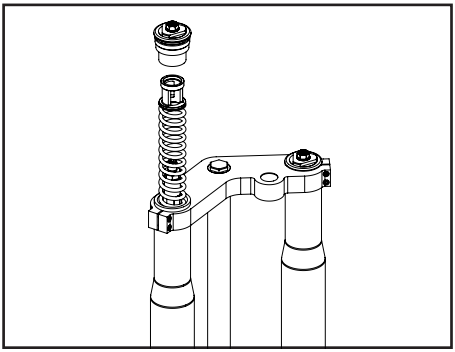

Remove the nylon spring pusher and the main spring slowly, keeping as much oil in the fork leg as possible.

6.

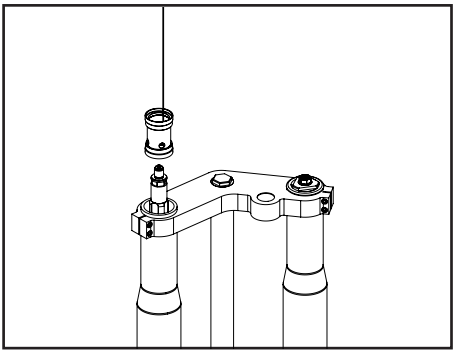

If a large amount of oil has been lost removing the spring it is necessary to check the oil level. To do this you will need to remove the spring preload spacer from under the main spring using a wire hook.

CHANGING THE FORK SPRINGS

7.

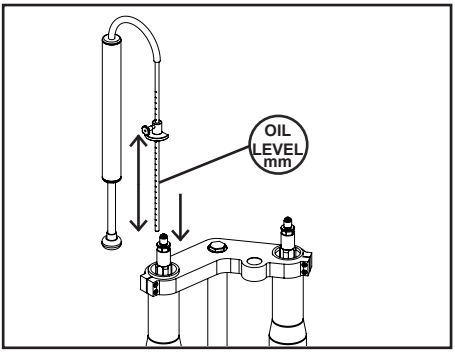

To check the oil level in the fork is to the recommended level use - Tool No. 113-030-500. To do this add approximately 100cc of oil to the fork, insert the oil level tool to the preset stop (see recommended settings on page 2) and suck out any excess oil. The piston rod should be fully compressed downwards when performing this procedure.

8.

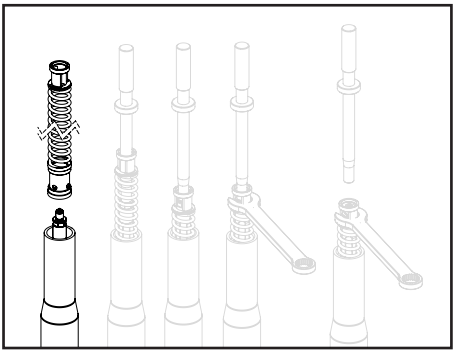

Refit the preload tube with nylon seats, with the holes facing downwards along with the optional spring you are choosing to use and the nylon spring pusher.

9.

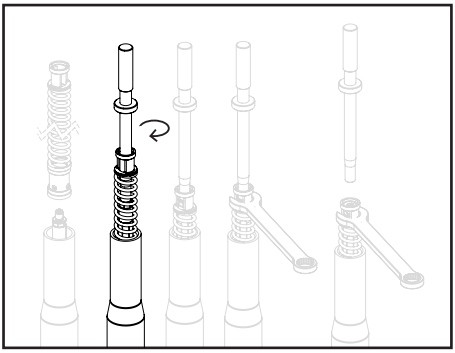

Using the pull up rod supplied - Tool No. 113-030-015 screw this onto the piston rod joiner.

K-Tech recommend 5wt.

CHANGING THE FORK SPRINGS

10.

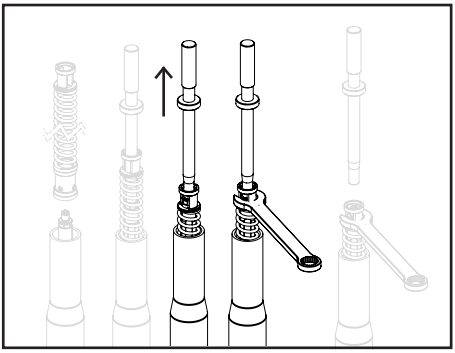

Pull the piston rod up and locate Tool No. 113-010-020 through the nylon spring pusher onto the 17mm hex on the piston rod joiner.

11.

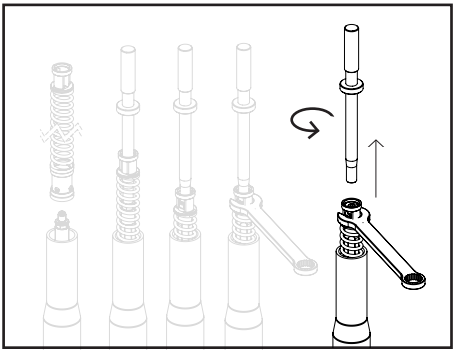

Remove the piston rod pull up tool.

12.

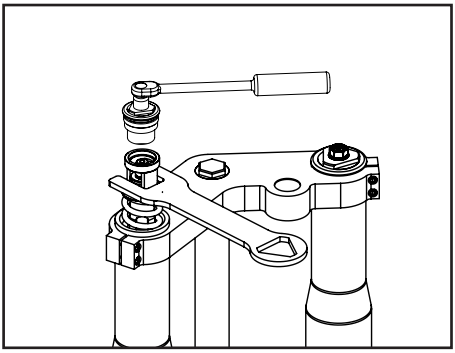

Fit the correct top cap onto the piston rod joiner using Tool No. 113-010-020 and a 14mm socket. Tighten the top cap to the piston rod joiner torque load to 20N/M (14.75lb - ft).

Fork cap with black adj in left hand fork.

Fork cap with natural adj in right hand fork leg.

CHANGING THE FORK SPRINGS

13.

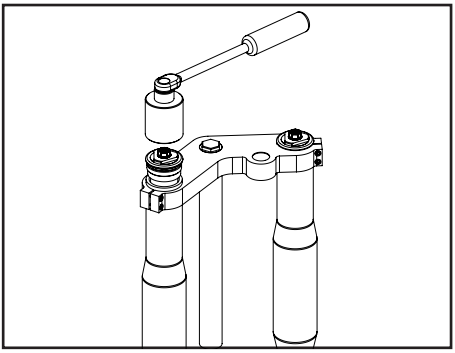

With one person on each handlebar slowly lift the bike and support the bike under the bottom fork clamp so the wheel is off the ground. Refit the top caps to the fork legs and torque load to 10N/M (7.35 lb-ft) - using Tool No. 113-020-000.

14.

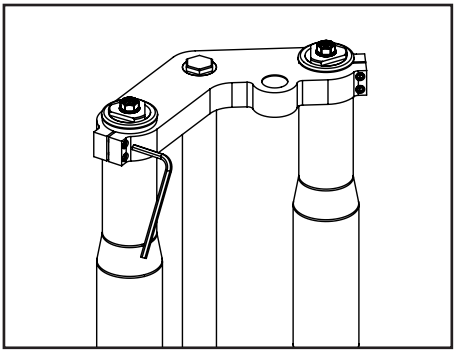

Tighten the upper fork clamp bolt to manufacturer's specification and adjust preload and damping settings to previous or recommended settings.
(Located at the front of document)

Packaging

K-Tech Suspension Ltd recommend that this product is serviced every 20 hours of use. It is very important that this product is serviced by an authorised dealer, as there are special tools required to guarantee correct performance of this product. K-Tech Suspension Ltd cannot be held responsible for any damage caused to/by the product if a service is overdue or was not conducted by an authorised dealer.

www.ktechsuspension.com/service-centres-and-partners

NOTES

www.ktechsuspension.com

Contact your local K-Tech dealer for more details at
www.ktechsuspension.com/service-centres-and-partners

©Copyright K-Tech Suspension Ltd 2017