YAMAHA MT-125 2025- / YAMAHA YZF R125 2025-

GP PRO

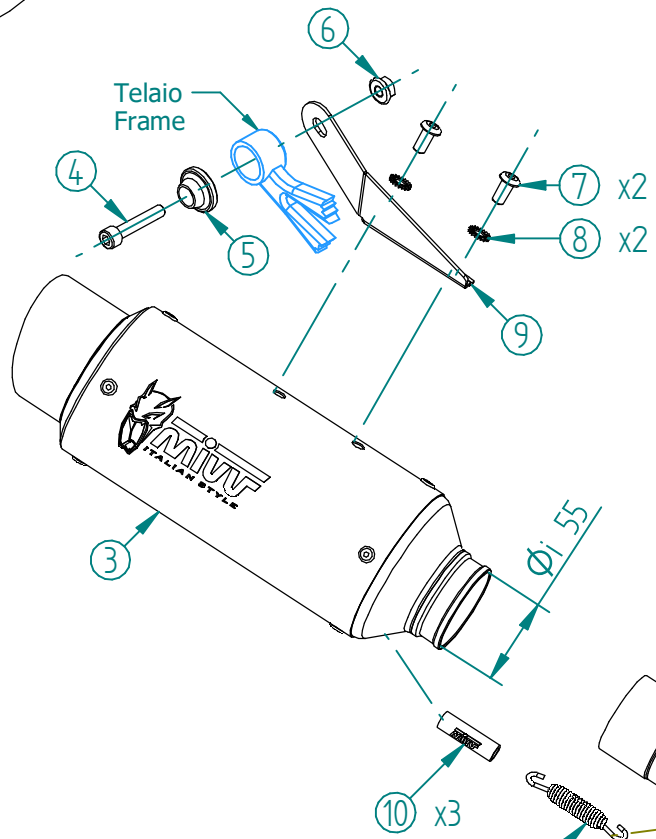

#	DESCRIPTION	PART NUMBER	QTY
1	Tubo collettore / Down pipe	9773Y067S2A	1
2	Tubo di raccordo / Link pipe	9773Y067S2B	1
3	Silenziatore / Muffler - dB killer 50.DK.145.0	GP PRO 220	1
4	Vite M8x40 / Screw M8x40	50.73.075.1	1
5	Rondella in alluminio nera / Black aluminium washer	50.73.221.1	1
6	Dado M8 flangiato / Flanged nut M8	50.73.393.1	1
7	Vite M8 x 16 / Screw M8 x 16	50.73.098.1	2
8	Rondella di sicurezza / Safety washer	50.73.604.1	2
9	Staffa / Bracket	50.SS.1288.0	1
10	Tubo in gomma per molla / Rubber pipe for spring	50.73.210.1	3
11	Molla media / Mid-size spring	50.73.359.1	3

OPTIONAL PART

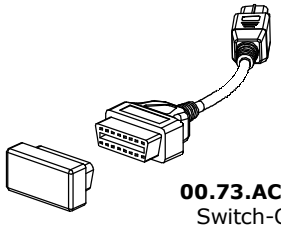

00.73.ACC.101.0
Switch-Off Key

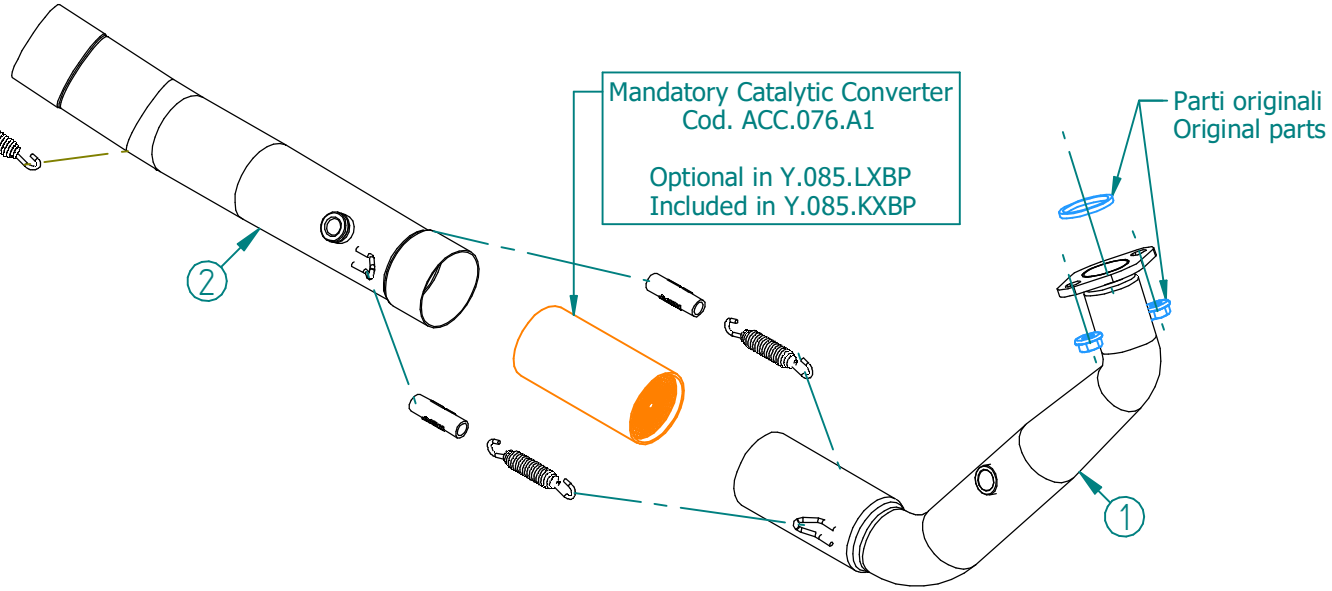

APPLICAZIONI / APPLICATIONS			
CODICE / CODE	SILENZIATORE / MUFFLER	TUBO / PIPE	NOTE
Y.085.LXBP	STEEL BLACK	INOX / ST. STEEL	CATALYTIC CONVERTER NOT INCLUDED
Y.085.KXBP			CATALYTIC CONVERTER INCLUDED